ENGINE, EXHAUST - Z26SPD92AN/AH/BN/BH (C750294)

2026 RZR - RZR PRO S ULTIMATE (R01) - Z26SPD92AN/AH/BN/BH

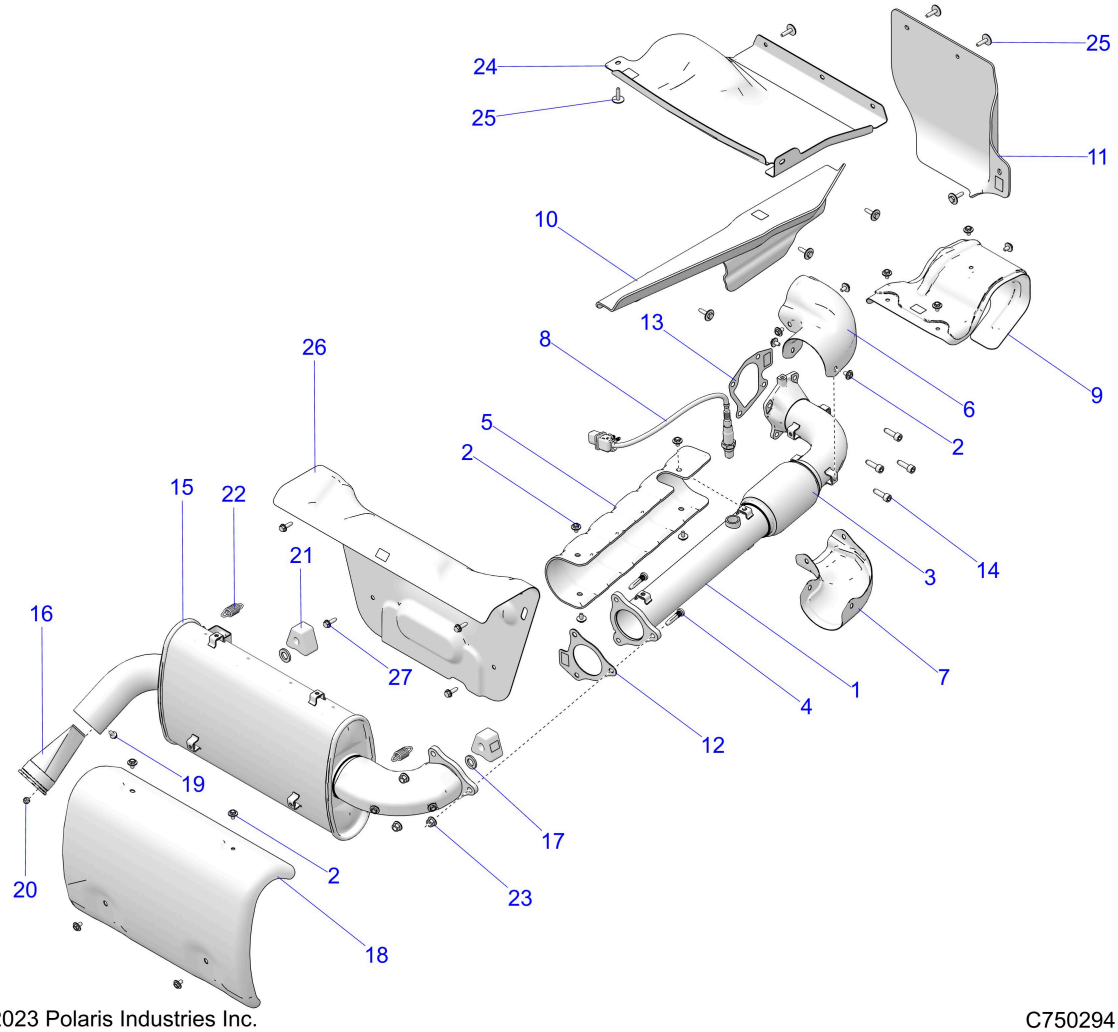

© 2023 Polaris Industries Inc. C750294

Reference #	Part#	Description	Quantity
1	1263282	ASM-HEADPIPE,TURBO [INCL. QTY 8 OF 2-7]	1
2	7520291	SCR-HHSEMS-M6X1.0X10 A286,LOCK	19
3	1262623	ASM-JOINT,FLEX	1
4	7520290	STUD-M8X1.25X40 660A SS,LOCK	3
5	5266196	SHIELD-HEAT,HEADPIPE,RR,INNER	1
6	5266709	SHIELD-HEAT,HEADPIPE,FRONT	1
7	5266760	SHIELD-HEAT,HEADPIPE,FRT,LOWER	1
8	2413317	SENSOR-WIDE BAND LAMBDA	1
9	5268730	SHIELD-HEAT,TURBO,UPPER	1
10	5274948	SHIELD-HEAT,TURBO,BOX	1
11	5814784	SHIELD-REAR CLOSEOFF	1
12	5814963	GASKET-EXHAUST,3 BOLT	1
13	5814964	GASKET-EXHAUST	1
14	7520277	SCR-SH-M8X1.25X25 A286,LOCK	4
15	1263802	ASM-SILENCER [INCL. QTY 7 OF 2 & 16-20]	1
16	1262390	WELD-SPARK ARRESTOR	1
17	7557190	WSHR-14.3X25.4X3.2 SS	2
18	5266648	SHIELD-SILENCER	1

19	7517257	SCREW-HXFL-M6X1.0X12 10.9 ZPC	1
20	7547120	NUT-HEX-M6X1.0 8 SPC	1
21	5417101	MNT-ISOLATOR	2
22	7043727	SPRING-EXHAUST S.S. SHOTPEENED	2
23	7547803	NUT-HXFL-M8X1.25 A493 EM6340	3
24	5814783	SHIELD-BOX,FRONT	1
25	7520964	SCR-HH-M6X1.0X25,ZPB SEMS	8
26	5272328	SHIELD-REAR,AL	1
27	7518529	SCR-M6X1.0X20,HXHD,FLG,TDFM,BK	4

Copyright 1996-2026 Polaris Industries U.S.A All rights reserved.